PERSONAL LIFE-SAVING APPLIANCES

PERSONAL LIFE-SAVING APPLIANCES

SHM's Guardian series lifejackets are specially manufactured to be easily worn & are fully compliant with the SOLAS LSA code. They come in adult and child sizes, and are recommended to combine with the SHM Pulse J1 Lifejacket Light.

GUARDIAN A1

SPECIFICATIONS

Lifejacket - Adult

Code	: L01101
Size	: Adult Universal, Oversize persons
Material	: Polyester Oxford Fabric, EPE Foam
Buoyancy	: > 150N
Size of wearer	: up to 140Kg with a chest girth of 175 cm
Accessories	: Emergency light (optional), whistle, buddy line, & lifting loop
Operating temp	: -30°C to +65°C

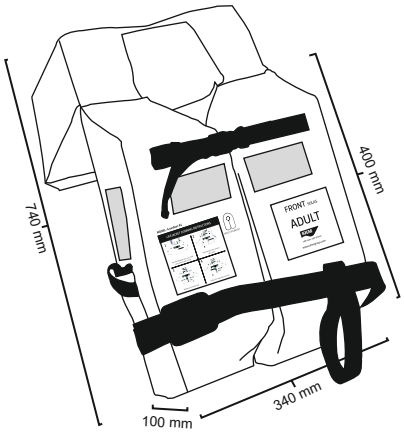

GUARDIAN C1

SPECIFICATIONS

Lifejacket - Child

Code	: L01102
Size	: Child
Material	: Polyester Oxford Fabric, EPE Foam
Buoyancy	: > 88N
Size of wearer	: 15 Kg to 43 Kg
Accessories	: Emergency light (optional), whistle, buddy line, & lifting loop
Operating temp	: -30°C to 65°C

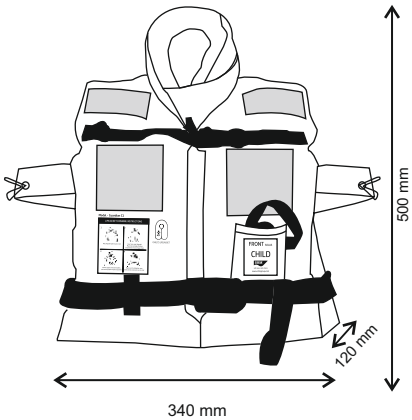

PULSE J1

SPECIFICATIONS

Lifejacket Light

Code	: L02101
Light	: LED Type, water activated
Duration Cycle	: 8 hrs
Flashing frequency	: 50 to 70 times/min
Battery	: Lithium battery
Shelf life	: 5 Years
Design	: Lightweight, waterproof, and compact
Operating temp	: -30°C to +65°C

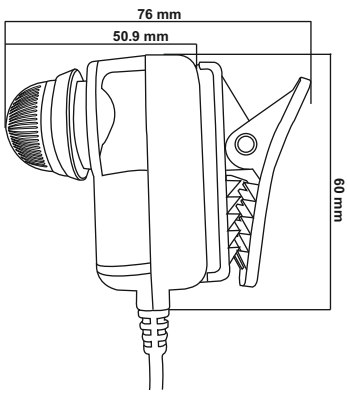

GUARDIAN 3925

SPECIFICATIONS

General Service Lifejacket

Code	: xxxxx
Type	: GSLJ/SHM - Guardian 3925
Inflation Type	: Oral
Buoyancy	: 16.5 Kg = 5%
Co2 Cylinder Weight	: 0.92 Kg = 5%
Weight	: 0.92Kg
Inflatable Stole	: Traffice yellow
Jacket Color	: Navy Blue
Working Air Temp.	: -15° to +40°
Construction	: As per NCD 3925 (as amended)

GUARDIAN 3926

SPECIFICATIONS

Hazardous Duty Lifejacket

Code	: xxxxx
Type	: HDLJ/SHM - Guardian 3926
Inflation Type	: Automatic, Manual, Oral
Buoyancy	: 16.5 Kg + 5%
Co2 Cylinder Weight	: 33g
Weight	: 1.05vKg + 5%
Inflatable Stole	: Traffice yellow
Jacket Color	: Navy Blue
Working Air Temp.	: -15° to +40°
Construction	: As per NCD 3926 (as amended)

RAFTER WORK VEST

SPECIFICATIONS

Work Vest With Collar

Size: Adult Universal.
Fabric Material: Highly Visible Nylon
Buoyancy: High Density Polyethylene Foam
Buoyancy: 150N
Standard: ISO 12402-3
Size Of Wearer: up to 140kg with a chest girth of 175cm
Accessories: Whistle, Buddy line, Leg strap
Emergency Lifejacket light (Optional)
Operating temp: -30C to +65C